ラム寸法図

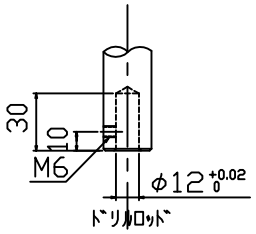

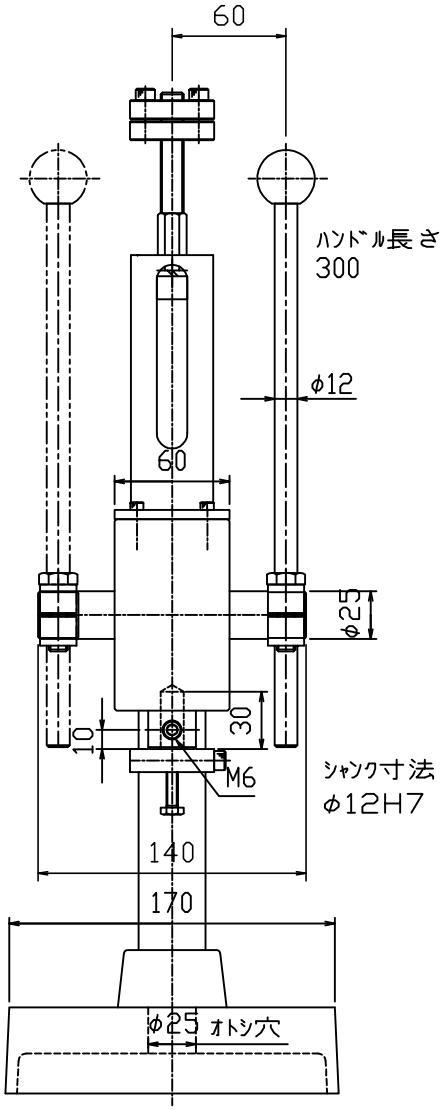

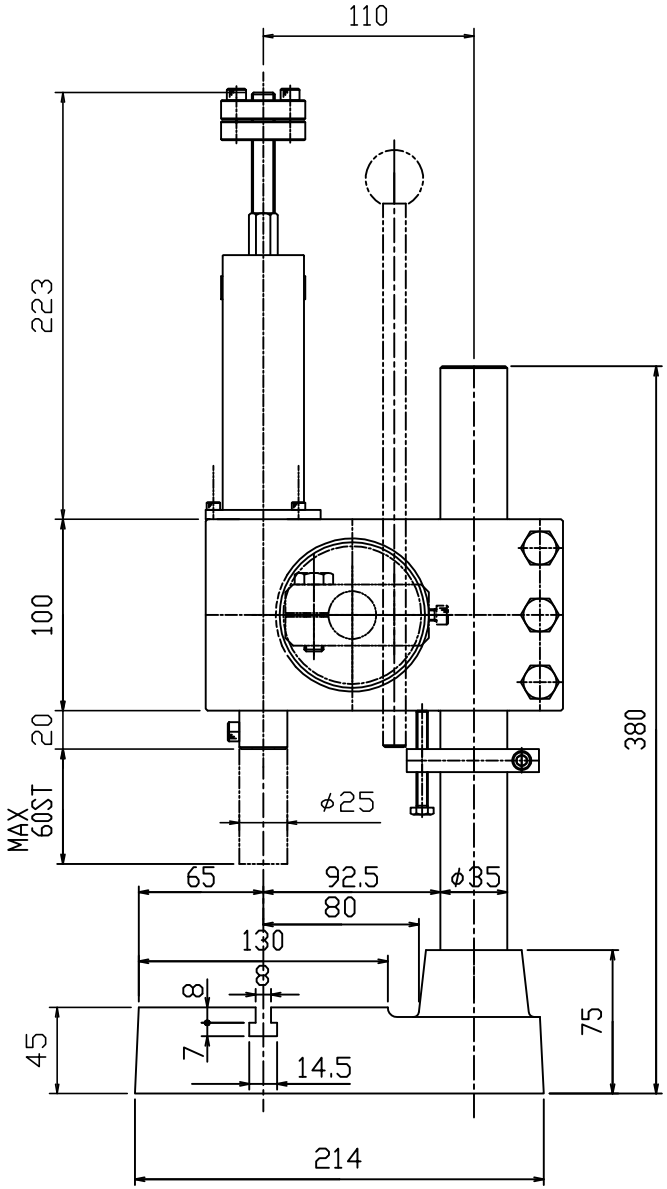

指示ナキ面ハC　トスル

FINISHING	TREATMENT	MATERIAL	QUANTITY	CUSTOMER
				MACHINE NAME H-1L
		SCALE 1/2	DATE	UNIT NAME
		MATEX		PARTS NAME 外　観　図
注文番号	新規 追加	APPROVED BY / CHECKED BY / DRAWN BY	A2	PARTS NO